* CONTRACTOR TO SUBMIT PROVIDE SHOP DRAWING & CALCULATION FOR STRUCTURAL ENGINEER / DESIGNER'S APPROVAL BEFORE CONSTRUCTION.
承建商/生产商须提交相关的生产图及物料样版予客方及设计师审批。工程中，如有牵涉到影响楼宇结构、消防系统、机电系统等事宜：相关的专业顾问(如：结构工程师、消防顾问、机电顾问等)，均须参予有关的协调工作，并确保该项目能乎合当地之政府规范要求。

© COPYRIGHT BY HIRSCH/BEDNER AND ASSOCIATES ALL RIGHTS RESERVED.

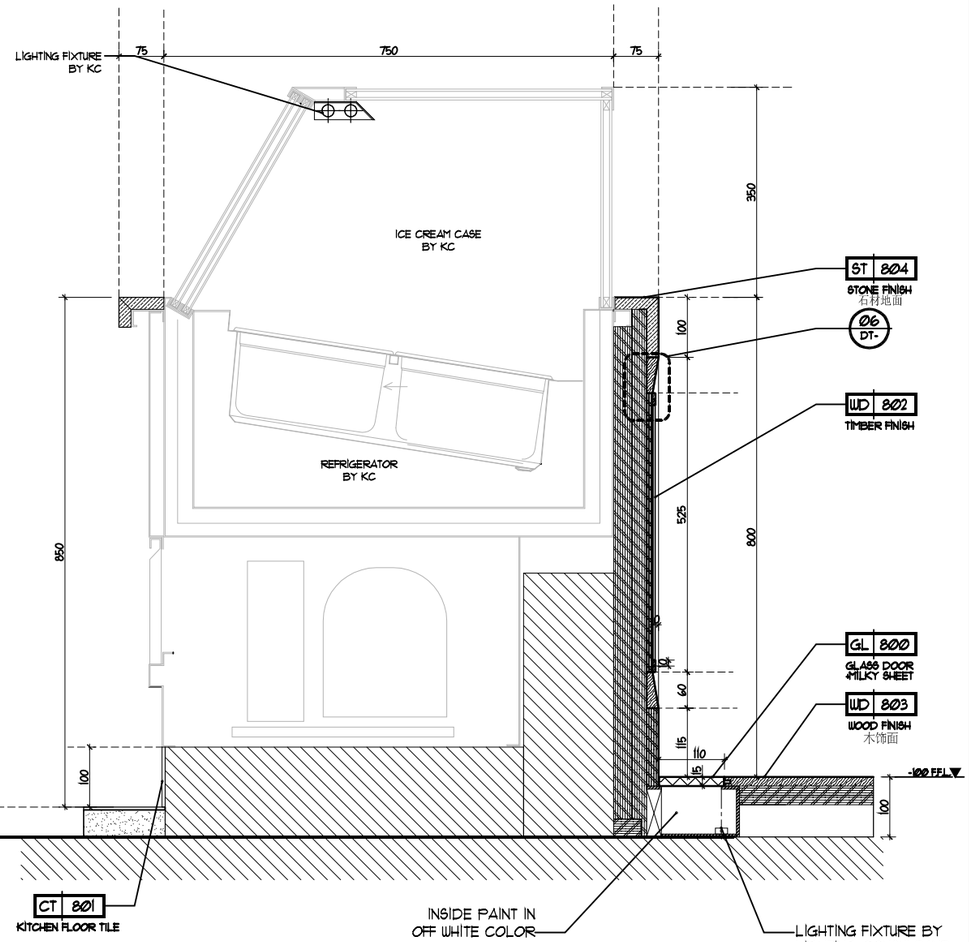

05 SECTION
Scale: 1:5

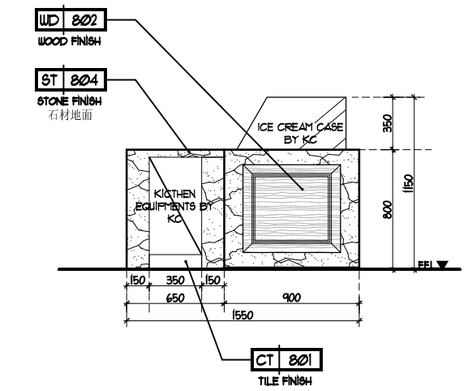

03 ELEVATION
Scale: 1:20

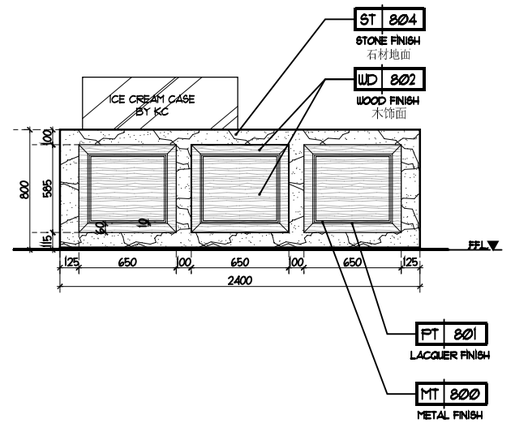

02 ELEVATION
Scale: 1:20

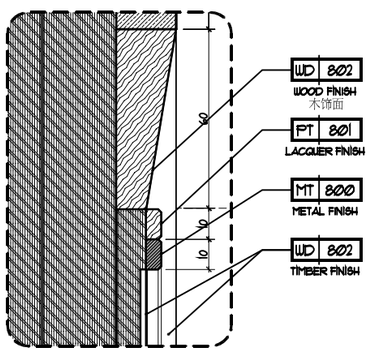

06 DETAIL
Scale: 1:1

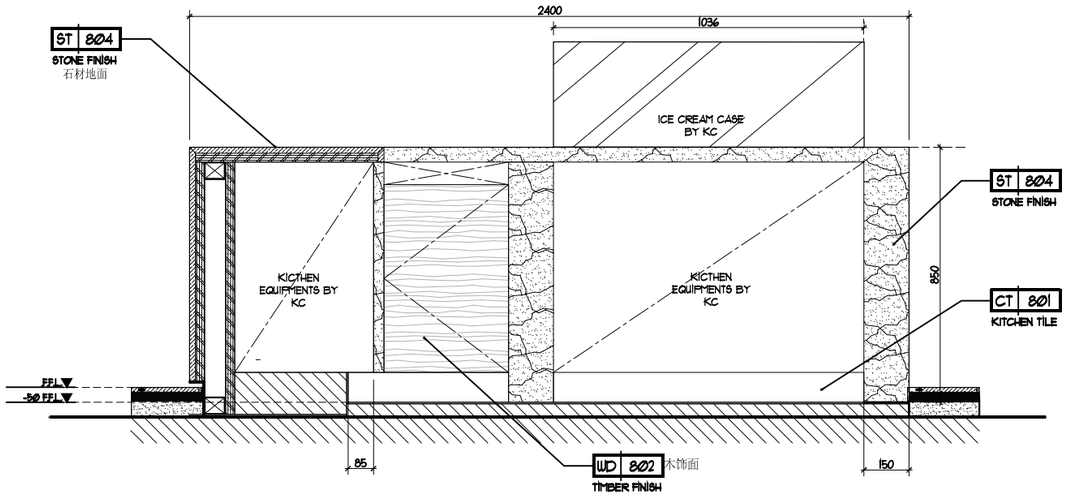

04 SECTION
Scale: 1:10

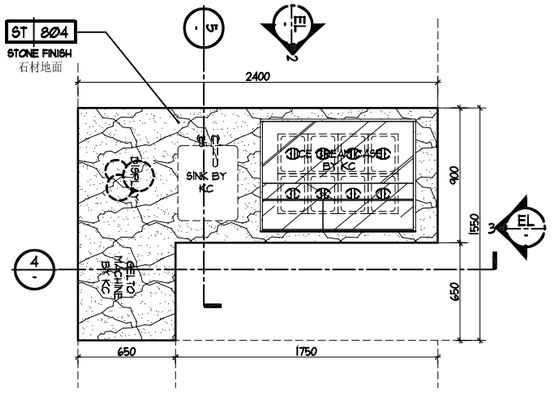

01 PLAN
Scale: 1:20

HIRSCH BEDNER ASSOCIATES ▪ DESIGN CONSULTANTS ▪ 23/F VICWOOD PLAZA ▪ 199 DES VOEUX ROAD CENTRAL ▪ HONG KONG ▪ 852-2542-2023

WWW.HBADESIGN.COM

杭州萧山雷迪森酒店
LANDISON HOTEL
XIAOSHAN HANGZHOU

LANDISON HOTELS & RESORTS

LEVEL 35
ICE CREAM COUNTER
DETAILS
三十五层行政酒廊 / 意大利餐廳詳图
DRAWING TITLE

1 17 APRIL 2012
REVISIONS DATE

This drawing is for information only to be used by the contractors as a general arrangement of interior conditions. It has been made from available information, however measurements are to be verified on project site. This drawing must be verified and approved prior to final detailing and fabrication.
This drawing is the property of HIRSCH BEDNER AND ASSOCIATES and is not to be reproduced or copied in whole or in part. It is only to be used for the project and site specifically identified herein and is not to be used on any other projects. It is to be returned upon request.

APPROVED
DRAWN BY
DATE 14 Nov2011
SCALE AS SHOWNED

SHEET No.
FD 10.1-22
PROJECT No.
2829.00